Published: 11-May-2011

Manual Transmission / Transaxle - TDV6 2.7L Diesel -

Sealers

Item	Land Rover Part No.
Adaptor shaft Allen bolt	STC 50553

Lubricant

Item	Specification
* Recommended lubricant	Burmah/Castrol MTF BOT 338

CAUTION: * Do not use any lubricant other than that specified.

Capacity

Unit	Capacity
Capacity - Wet and dry fill	1.6 litres (2.8 pints) (1.5 US quarts)

General Specifications

Item	Specification
Gearbox make/type	ZF S6-53 fitted with gear position and speed sensors
Gears	6 forward, 1 reverse - all synchromesh
Synchromesh:	
Triple	First gear
Dual	Second, third, fourth and reverse gears
Single	Fifth and sixth gears
Torque - Maximum	472 Nm (347 lbf ft)
Gear ratios:	
First	5.080:1
Second	2.804:1
Third	1.783:1
Fourth	1.260:1
Fifth	1.000:1
Sixth	0.835:1
Reverse	4.725:1
Gear position sensor	Mounted on the gearbox and connected to transfer box ECU
Speed sensor	Mounted at the rear of the gearbox casing and connects to the transfer box ECU to enable range changes on the move function

Torque Specifications

Description	Nm	lb-ft
* Transmission fluid drain plug	35	26
* Transmission fluid filler plug	35	26
Transmission undershield bolts	10	7
Output shaft speed sensor Torx screw	10	7
+ Gear position sensor Torx screws	10	7
+ Adaptor shaft Allen bolt	68	50
Transmission bolts	40	30
Gearbox breather line support bracket bolts	10	7
Turbocharger support bracket:		
M8 bolt	25	18
Nut	25	18
M10 bolts	40	30
Exhaust cross-over pipe center support bracket bolts	25	18
Exhaust cross-over pipe LH/RH supprt bracket bolts	25	18

*** New drain / filler plugs must be fitted**

+ Apply sealant, Part No. STC 50553 to threads of bolt / Torx screws

transmissionmanuals.com

Published: 11-May-2011

Manual Transmission / Transaxle - TDV6 2.7L Diesel - Manual Transmission

Description and Operation

External View

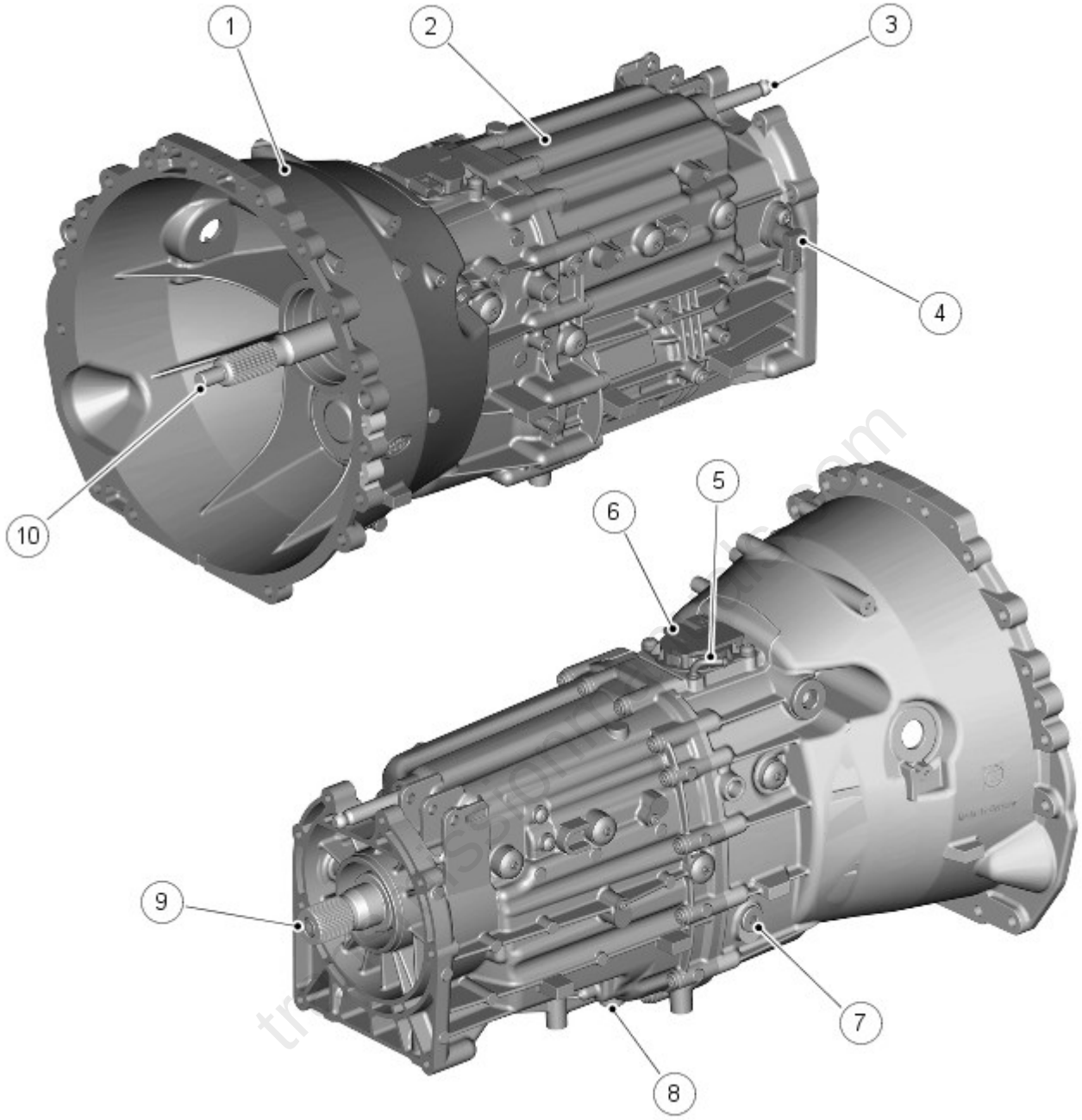

E47702

Item	Part Number	Description
1	-	Front housing
2	-	Rear housing
3	-	Gear selector shaft
4	-	Speed sensor
5	-	Breather
6	-	Gear position sensor
7	-	Oil filler plug
8	-	Oil drain plug
9	-	Output shaft
10	-	Input shaft

GENERAL

The ZF S6-53 all synchromesh transmission has six forward gears and a reverse. It is mounted longitudinally and has a maximum torque capacity of 472Nm. The aluminium die-cast front housing is bolted to the front of the transmission and the DD295 transfer box is mounted at the rear.

The sixth gear has been set up as an economic overdrive to ensure comfortable travel at higher vehicle speeds. Optimum

gear steps ensure highly fuel-efficient utilisation of the engine torque.

The idler gears of the 1st, 2nd, 6th and reverse gears are located on the main shaft, while the 3rd and 4th gears are located on the layshaft. The mating gears are solidly attached to the opposite shaft. Changing direction, via the reverse gear, is achieved with the assistance of an intermediate gear situated between the layshaft and main shaft. The layshaft and main shaft are hollow to reduce weight.

The transmission is a fill for life unit and no level check is required at service unless a leak is present.

Technical Data

Input Torque	Ratios							Weight including oil	Oil fill, from dry	Oil grade
	1st	2nd	3rd	4th	5th	6th	Rev.			
472Nm	5,08	2,80	1,78	1,26	1,00	0,84	4,61	57kg	1.6L	Castrol BOT 338

INTERNAL SHIFTING SYSTEM

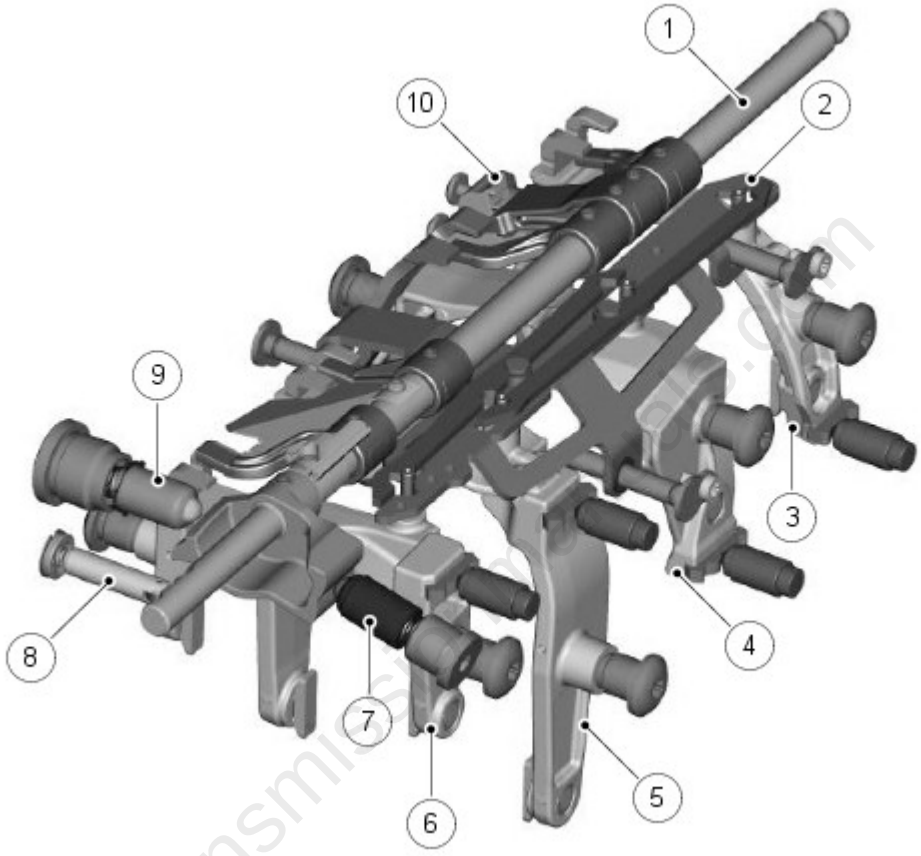

E47703

Item	Part Number	Description
1	-	Gear selector shaft
2	-	Locking bracket (interlock)
3	-	Swing fork reverse gear
4	-	Swing fork 1st/2nd speed
5	-	Swing fork 3rd/4th speed
6	-	Swing fork 5th/6th speed
7	-	X-gate bias load detent, forward gears
8	-	Central detent
9	-	X-gate bias load detent, reverse gear
10	-	Gate

In contrast to a traditional manual transmission where there are typically three forks, fixed to and controlled by three shafts, that are engaged by the shift lever, the ZF S6-53 transmission utilises a single central gear selector shaft and aluminium die-cast swing forks to generate the axial motion needed in the sliding sleeve for changing gears. This reduces friction in the internal shifting system.

The central gear selector shaft transfers the selection and shifting motion to the transmission. The gear shift fingers, located at different angles on the central control shaft, mesh with one of the swing fork engaging pieces.

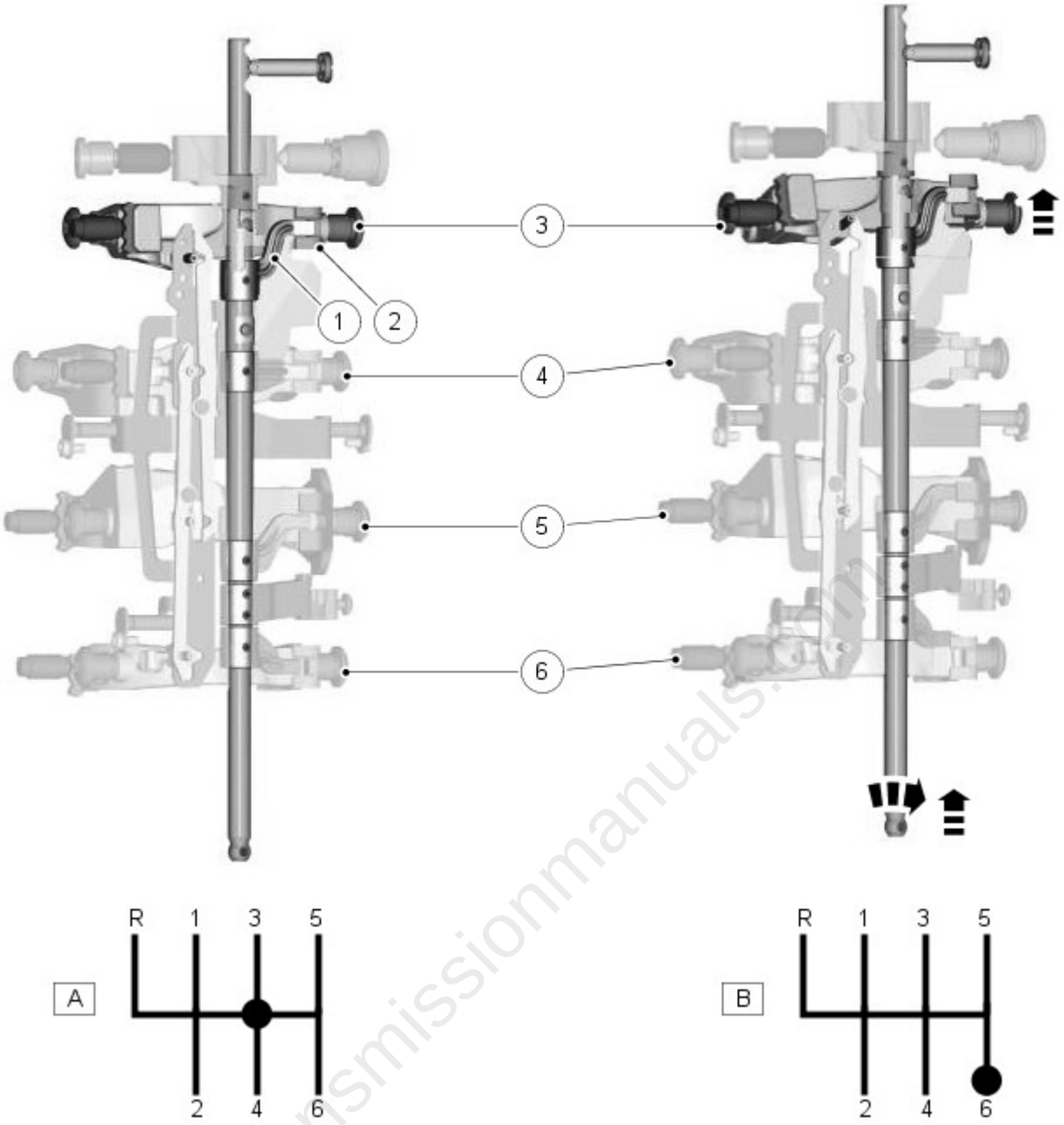

E47704

Item	Part Number	Description
A	-	Neutral position
B	-	6th gear position
1	-	Gear shift fingers
2	-	Swing fork engaging pieces
3	-	Swing fork 5th/6th
4	-	Swing fork 3rd/4th
5	-	Swing fork 1st/2nd
6	-	Swing fork reverse

The axial displacement of the central gear selector shaft leads to a tilting motion of the swing fork above the corresponding engaging piece. This tilting motion of the swing fork is forwarded, via two sliding pads, as an axial motion to the sliding sleeve guided by the synchroniser body. The sliding sleeve is moved from the neutral position towards the free-wheeling gear and, once synchronisation is complete, connects the free-wheeling gear to the main and/or layshafts.

INTERLOCK

The interlock prevents the simultaneous engagement of several gears.

transmissionmanuals.com

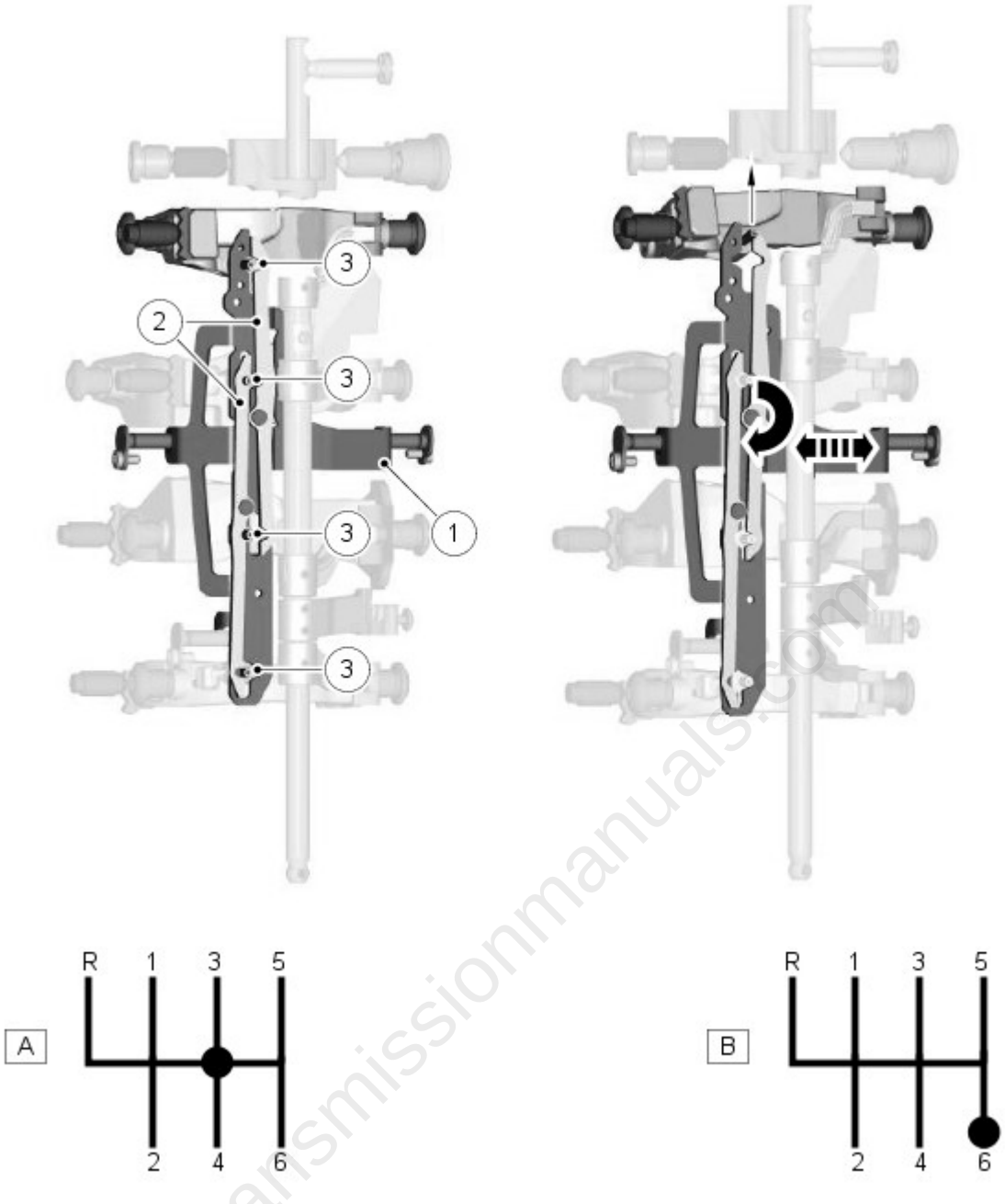

transmissionmanuals.com

Item	Part Number	Description
A	-	Neutral position
B	-	6th gear position
1	-	Locking bracket
2	-	Locking lever
3	-	Locking pins

Two locking levers, attached to a locking bracket, control the interlock. The locking system works passively, i.e. the locking mechanism is actuated through the swing fork motion itself. The swing forks are therefore designed with locking pins.

During gear engagement, the locking levers are turned by the locking pins on the swing forks in the direction of the selected gear and the locking bracket is shifted axially. The shifted swing fork remains moveable and all other swing forks are fixed in place by their respective locking pins and the recesses at the locking levers and/or locking bracket.

GATE

An exact H-shifting pattern is used through the gear change shaft guide in the gate.

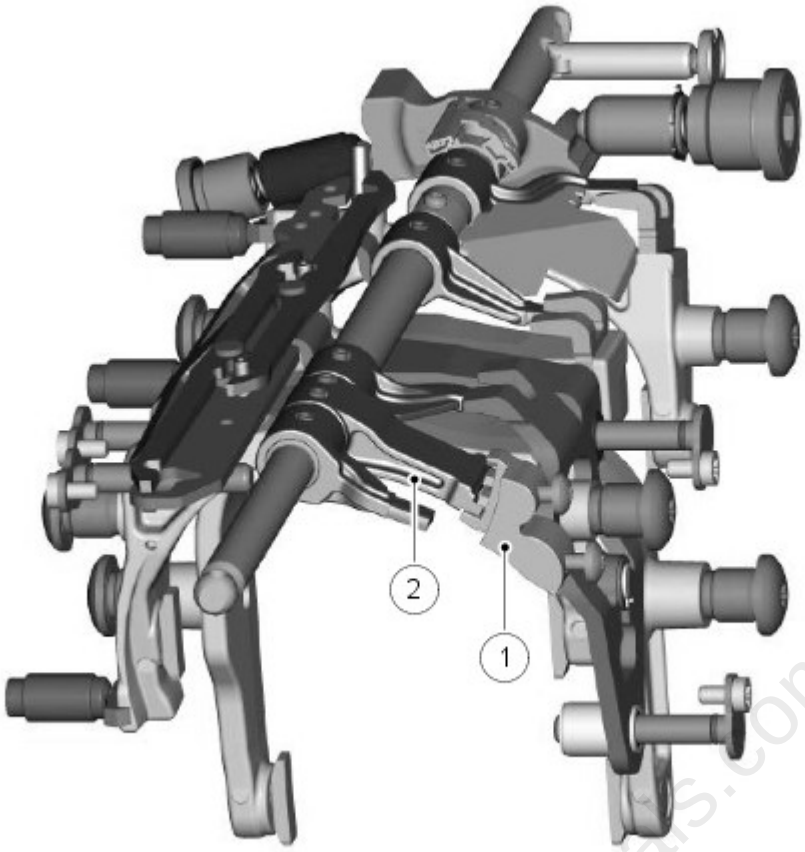

E47706

Item	Part Number	Description
1	-	Gate guide
2	-	Finger

A finger attached to the gear change shaft ensures alignment of the corresponding guide groove in the gate, depending upon the selected shift gate. In the engaged gear, the gate limits the side-to-side freeplay at the shift lever.

SYNCHRONISATION

The purpose of a synchromesh is to allow the collar and the gear to make frictional contact before the dogteeth make contact. This lets the collar and the gear synchronize their speeds before the teeth need to engage. The cone/s on the gear fits into the cone-shaped area in the collar, and friction between the cone and the collar synchronize the collar and the gear. The outer portion of the collar then slides so that the dogteeth can engage the gear.

Fast and easy shift engagement of the transmission is achieved by single, double and triple cone synchroniser mechanisms.

Gear	Synchro
1st	Triple
2nd	Dual
3rd	Dual
4th	Dual
5th	Single
6th	Single
Reverse	Dual

GEAR POSITION SENSOR

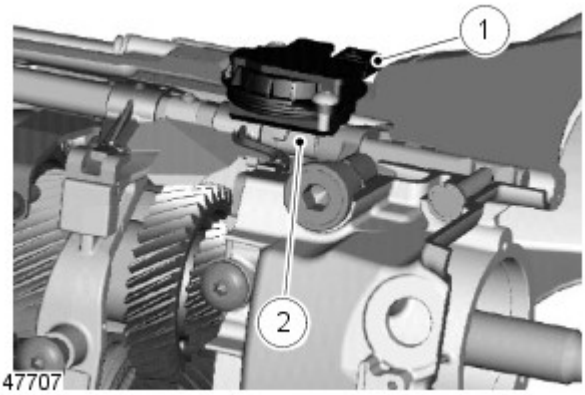

E47707

transmissionmanuals.com

Item	Part Number	Description
1	-	Sensor body
2	-	Magnet assembly

A gear position sensor, located on top of the front housing, is used to enable the transfer box to determine which gear the transmission is in. This information is used for both instrumentation and range change functions.

The transfer box control module receives a gear position signal and publishes the status on the CAN bus. The selected gear is shown in the information display of the instrument cluster. The transfer box also uses the status message to check the vehicle is in neutral before attempting a range change.

The gear position sensor is a Permanent Linear Contact less Displacement (PLCD) type sensor. It uses the 'X' axis as the left and right position of the lever and the 'Y' axis as the forward and backward position. The sensor gives a voltage in 'X' and 'Y' directions, which is used to deduce the gear position.

The PLCD sensor uses the electromagnetic induction principle, which has a primary winding around a soft magnetic core. On each end of the core is a second short coil winding and when a permanent magnet is in the vicinity of the sensor, the core is interrupted at that point and two separate transformers are created. Each transformer generates an induced voltage in the secondary coils. The induced voltage of 0 to 5 V in turn provides proportional feedback to the transfer box control module relative to the position of the magnet assembly.

SPEED SENSOR

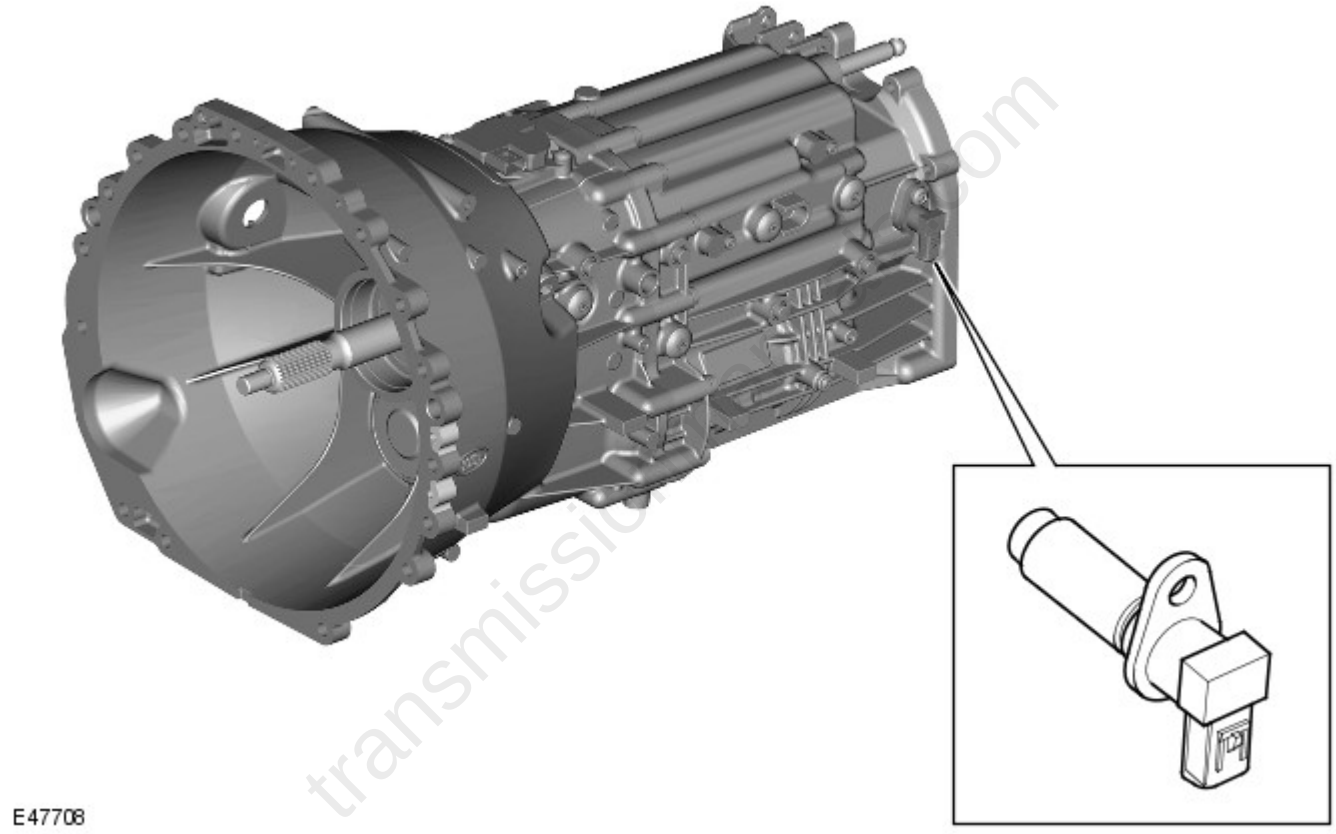

Item	Part Number	Description
1	-	Speed sensor

The transfer box is designed to allow range changes when the vehicle is moving, providing the transmission speed complies with the preset thresholds determined by the transfer box control module.
For additional information, refer to: Four-Wheel Drive Systems (308-07A Four-Wheel Drive Systems, Description and Operation).

The transmission speed sensor is a Hall effect sensor and is located at the rear of the transmission. The sensor measures the speed of the transmission output shaft from a single tooth reluctor on the output shaft.

Hall effect sensors require a supply current, which allows the sensor to detect zero movement. Hall sensors use the principle of a voltage, which is generated across a semiconductor carrying an electric current. The voltage is generated when the transmission output shaft reluctor is exposed to magnetic flux.

When the semiconductor is exposed to a magnetic flux, the electron flow through the semiconductor is deflected creating a potential difference across the semiconductor. This difference in voltage is called the Hall effect. It is this voltage that the transfer box control module uses to establish the speed of the transmission output shaft.

When the reluctor is near the sensor, the sensor produces a low voltage output. When the reluctor is away from the sensor, the sensor produces a high output voltage (battery voltage).

The sensor connector has three wires; one is used for sensor earth, one is supply current, from the transfer box control module, and the other is the signal output to the transfer box control module.

SERVICE

The ZF S6-53 manual transmission is a black box unit. Therefore the repairs permitted are limited to:

- Oil drain plug
- Oil filler plug
- Layshaft sealing cap
- Input shaft seal
- Gear position sensor and magnet assembly
- Selector shaft seal
- Speed sensor
- Output shaft and output shaft seal.

transmissionmanuals.com

Published: 11-May-2011

Manual Transmission / Transaxle - TDV6 2.7L Diesel - Transmission Draining and Filling

General Procedures

CAUTION: The fluid filler plug is not a fluid level plug.

1. WARNING: Do not work on or under a vehicle supported only by a jack. Always support the vehicle on safety stands.

   Raise and support the vehicle.

2. If installed, remove the transmission undershield.
   - Remove the 6 bolts.

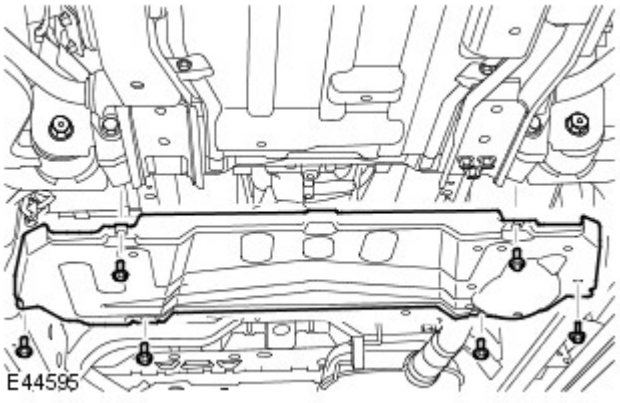

3. Clean the area around the transmission fluid drain and filler plugs.
4. Place a container under the transmission.
5. Remove the transmission fluid filler plug.

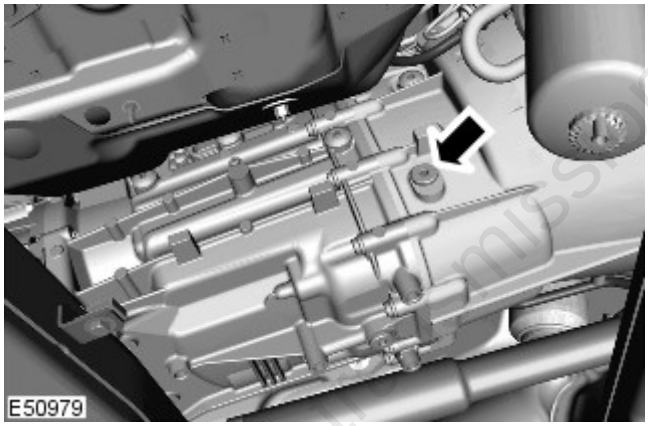

6. Remove the transmission fluid drain plug.
   - Drain the transmission.

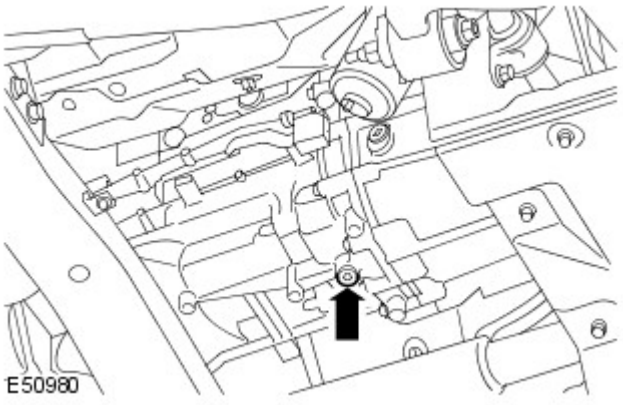

7. Install a new transmission fluid drain plug and tighten it to 35 Nm (26 lb.ft).
8. CAUTION: The fluid filler plug is not a fluid level plug.

Fill transmission with 1.6 litres of the correct transmission fluid.
For additional information, refer to: Specifications (308-03 Manual Transmission/Transaxle - TDV6 2.7L Diesel, Specifications).

9. Install a new transmission fluid filler plug and tighten it to 35 Nm (26 lb.ft).

- Remove the container.

10. If installed, install the transmission undershield.

- Tighten the bolts to 10 Nm (7 lb.ft).

transmissionmanuals.com

Published: 11-May-2011

Manual Transmission / Transaxle - TDV6 2.7L Diesel - Output Shaft Speed (OSS) Sensor

In-vehicle Repair

Removal

1. WARNING: Do not work on or under a vehicle supported only by a jack. Always support the vehicle on safety stands.

   Raise and support the vehicle.

2. If installed, remove the transmission undershield.
   - Remove the 6 bolts.

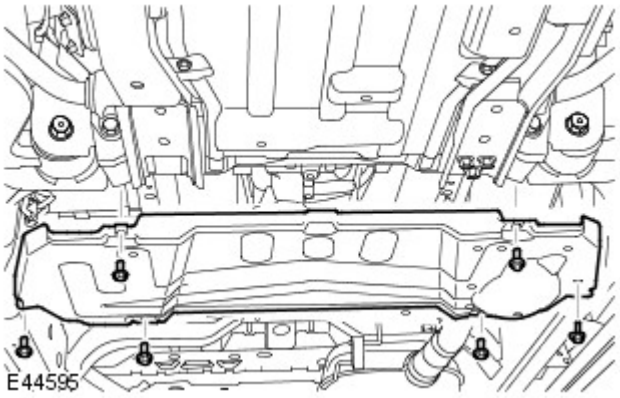

3. Remove the OSS sensor.
   - Disconnect the electrical connector.
   - Remove the Torx screw.

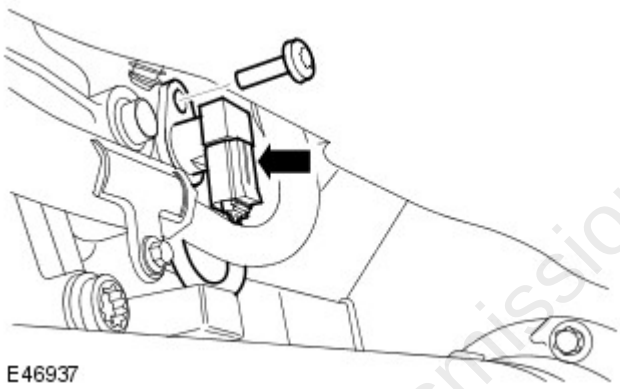

Installation

1. Install the OSS sensor.
   - Clean the component mating faces.
   - Tighten the Torx screw to 10 Nm (7 lb.ft).
   - Connect the electrical connector.

2. If installed, install the transmission undershield.
   - Tighten the bolts to 10 Nm (7 lb.ft).

transmissionmanuals.com

Published: 11-May-2011

Manual Transmission / Transaxle - TDV6 2.7L Diesel - Output Shaft Seal

In-vehicle Repair

Special Tool(s)	
205-817/01  E55425	Adaptor shaft holding/extractor split 205-817/01
205-817/02  E55426	Adaptor shaft holding/extractor ring 205-817/02
205-817/03  E55427	Adaptor shaft holding/extractor bolt 205-817/03
100-005A  E49451	General purpose puller 100-005A (LRT-99-500A)
308-375 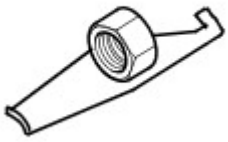 E55428	Seal extractor 308-375
100-012  E54135	Impulse extractor 100-012 (LRT-99-004)
205-818  E55429	Seal installer 205-818

transmissionmanuals.com

	Impulse extractor adaptor 100-12/01

Removal

1. WARNING: Do not work on or under a vehicle supported only by a jack. Always support the vehicle on safety stands.

   Raise and support the vehicle.

2. Remove the transfer case.
   For additional information, refer to: Transfer Case - TDV6 3.0L Diesel (308-07B Transfer Case, Removal).

3. Remove the Allen bolt retaining the adaptor shaft.
   - Use the special tool to hold the adaptor shaft.

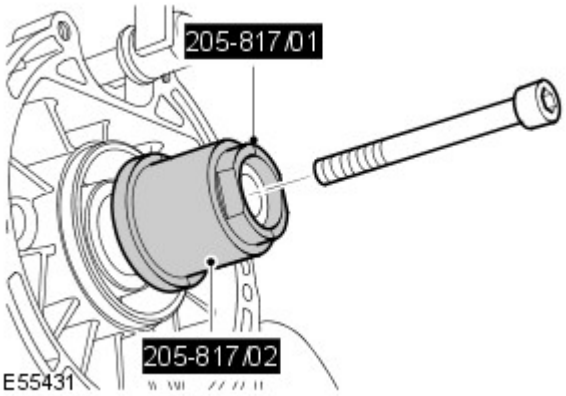

4. Remove the adaptor shaft.
   - Use the special tools.

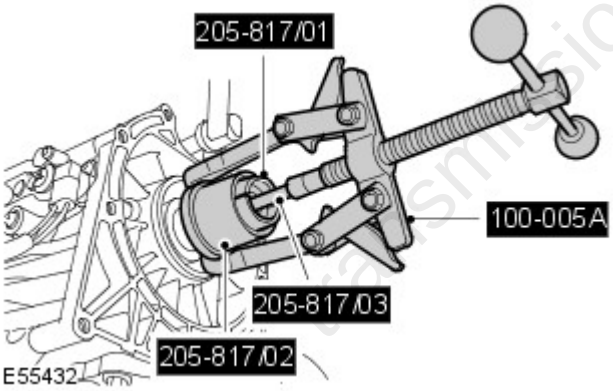

5. Remove the output shaft seal.
   - Use the special tool.

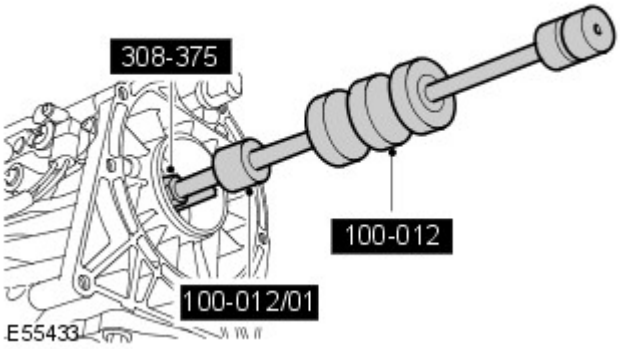

Installation

transmissionmanuals.com

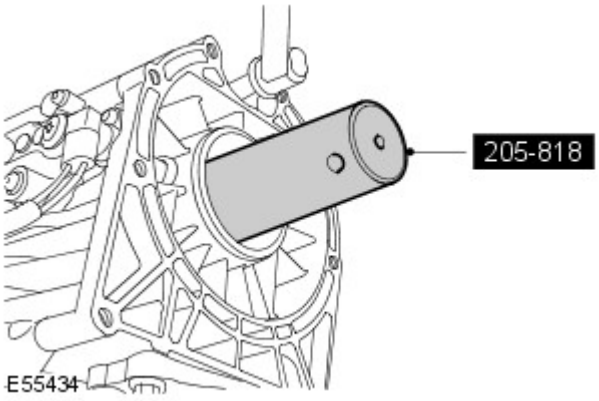

1. CAUTION: Oil seals must be fitted dry.

   Install a new output shaft seal.

   - Clean the component mating faces.
   - Use the special tool.

2. WARNING: Wear protective gloves.

   Install the adaptor shaft.

   - Clean the component mating faces.
   - Heat the adaptor shaft evenly to 120 degrees Centigrade before fitting the adaptor shaft to the splines.

3. Install the Allen bolt.

   - Use the special tool to hold the adaptor shaft.
   - Apply sealant to the Allen bolt thread.
   - Tighten the Allen bolt to 68 Nm (50 lb.ft).

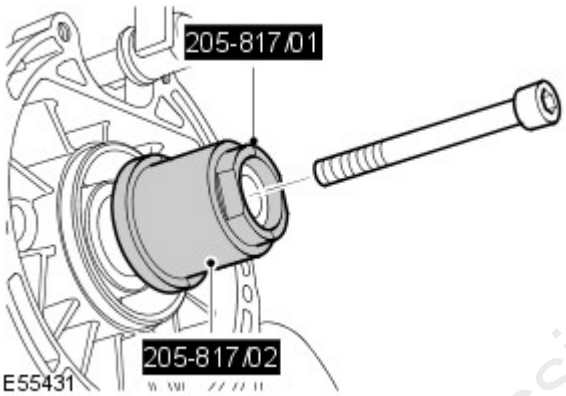

4. Install the transfer case.
   For additional information, refer to: Transfer Case - TDV6 3.0L Diesel (308-07B Transfer Case, Removal).
5. Drain and refill the transmission.
   For additional information, refer to: Transmission Draining and Filling (308-03 Manual Transmission/Transaxle - TDV6 2.7L Diesel, General Procedures).

transmissionmanuals.com

Published: 11-May-2011

Manual Transmission / Transaxle - TDV6 2.7L Diesel - Countershaft Seal

In-vehicle Repair

Special Tool(s)	
308-617  E55409	Seal extractor drill 308-617
308-615 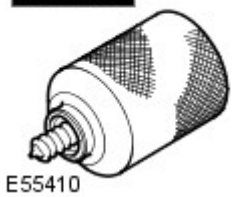 E55410	Seal extractor 308-615
100-012  E54135	Impulse extractor 100-012 (LRT-99-004)
308-620  E55411	Seal installer 308-620

transmissionmanuals.com

Removal

1. WARNING: Do not work on or under a vehicle supported only by a jack. Always support the vehicle on safety stands.

Raise and support the vehicle.

2. Remove the transmission.
For additional information, refer to: Transmission (308-03 Manual Transmission/Transaxle - TDV6 2.7L Diesel, Removal).

3. CAUTION: Use a drill stop. Do not drill deeper than 5 mm.

Using the special tool, drill a 3 mm hole in the seal as shown.

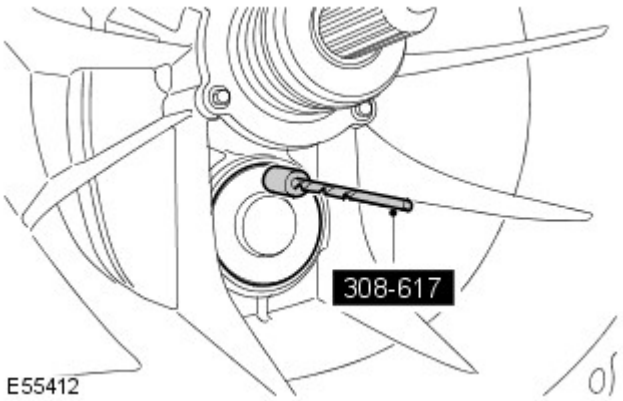

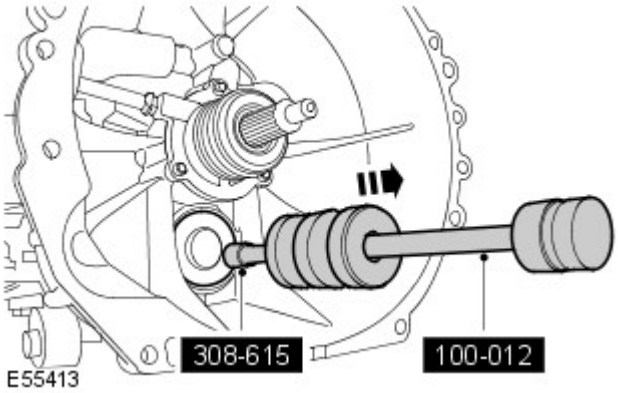

4. Remove the countershaft seal.

- Install the extractor.

Installation

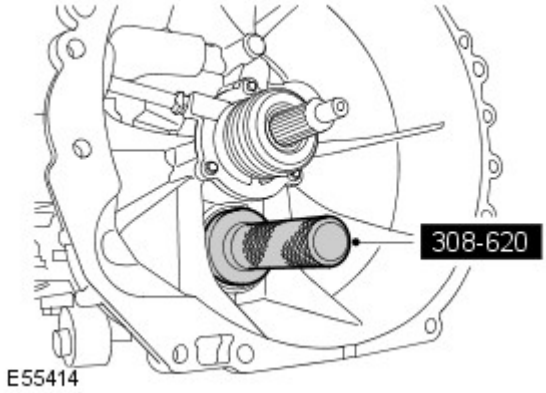

1. Install the countershaft seal.

- Clean the component mating faces.
- Use the special tool.

2. Install the transmission.
For additional information, refer to: Transmission (308-03 Manual Transmission/Transaxle - TDV6 2.7L Diesel, Removal).

3. Drain and refill the transmission.
For additional information, refer to: Transmission Draining and Filling (308-03 Manual Transmission/Transaxle - TDV6 2.7L Diesel, General Procedures).

transmissionmanuals.com

Published: 11-May-2011

Manual Transmission / Transaxle - TDV6 2.7L Diesel - Input Shaft Seal

In-vehicle Repair

Special Tool(s)	
308-615 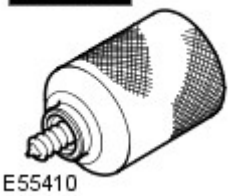 E55410	Seal extractor 308-615
100-012  E54135	Impulse extractor 100-012 (LRT-99-004)
308-618 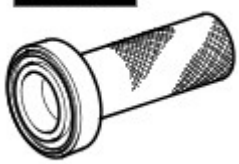 E55405	Seal installer 308-618

Removal

1. WARNING: Do not work on or under a vehicle supported only by a jack. Always support the vehicle on safety stands.

Raise and support the vehicle.

2. Remove the clutch slave cylinder and release bearing assembly.
For additional information, refer to: Clutch Slave Cylinder (308-02 Clutch Controls - TDV6 2.7L Diesel, Removal and Installation).

3. NOTE: The screw holes are located through the rubber membrane.

Locate the hole for the extraction tool screw.

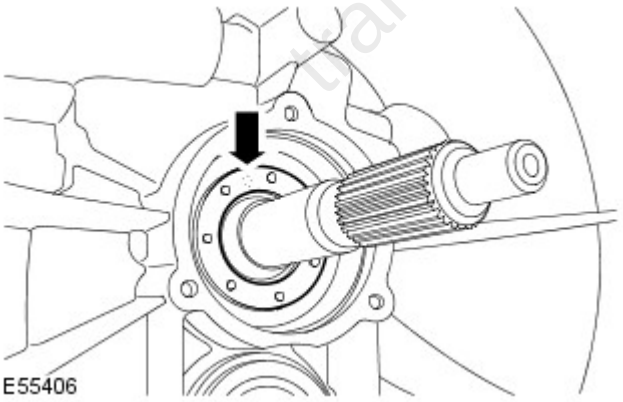
E55406

transmissionmanuals.com

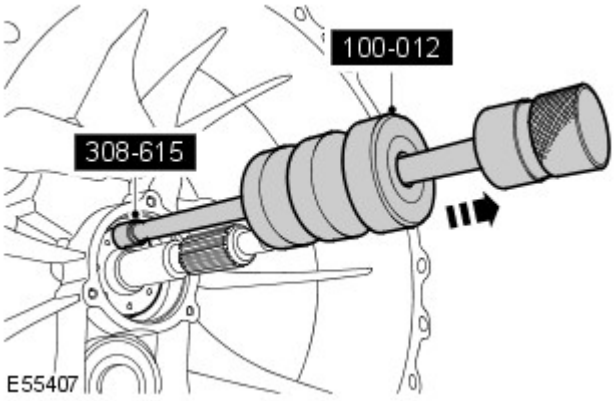

4. Remove the input shaft seal.
   - Install the special tool.

Installation

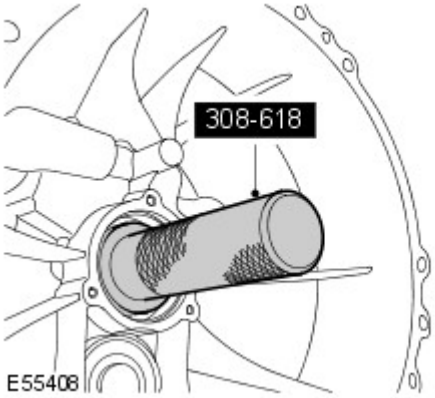

1. Install the input shaft seal.
   - Clean the component mating faces.
   - Use the special tool.
2. Install the clutch slave cylinder and release bearing assembly. For additional information, refer to: Clutch Slave Cylinder (308-02 Clutch Controls - TDV6 2.7L Diesel, Removal and Installation).
3. Drain and refill the transmission. For additional information, refer to: Transmission Draining and Filling (308-03 Manual Transmission/Transaxle - TDV6 2.7L Diesel, General Procedures).

transmissionmanuals.com

Published: 11-May-2011

Manual Transmission / Transaxle - TDV6 2.7L Diesel - Gearshift Control Shaft Seal

In-vehicle Repair

Special Tool(s)	
308-621  E55400	Seal extractor 308-621
308-622 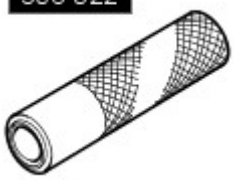 E55401	Seal installer 308-622

Removal

1. WARNING: Do not work on or under a vehicle supported only by a jack. Always support the vehicle on safety stands.

Raise and support the vehicle.

2. Remove the transfer case.
For additional information, refer to: Transfer Case - TDV6 3.0L Diesel (308-07B Transfer Case, Removal).

3. Release the gearshift rod.

- Remove the clip.
- Remove and discard both O-ring seals.

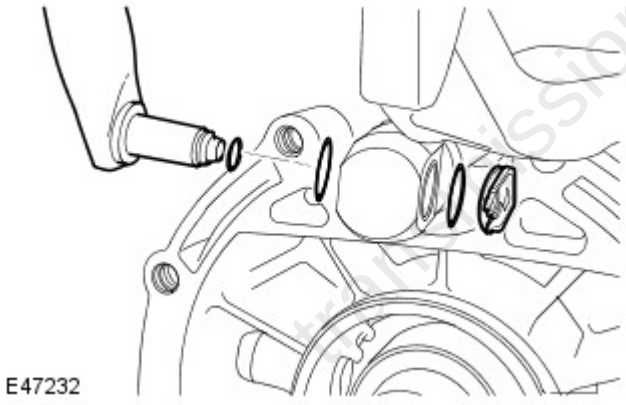
E47232

4. Remove the selector rod coupling.

- Release the clip.
- Remove the link pin.

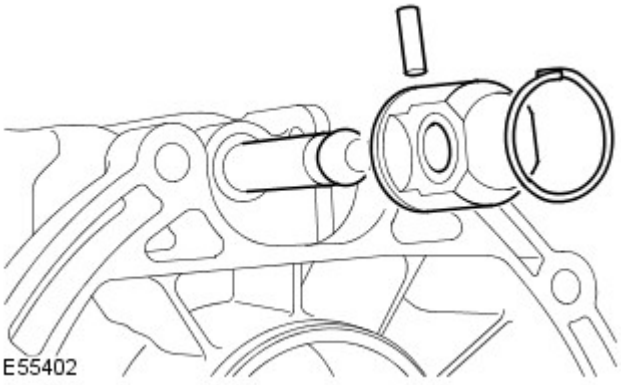
E55402

transmissionmanuals.com

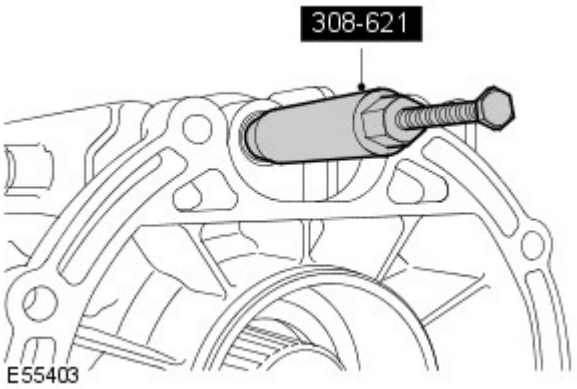

5. Remove the gearshift control shaft seal.

- Use the special tool.

Installation

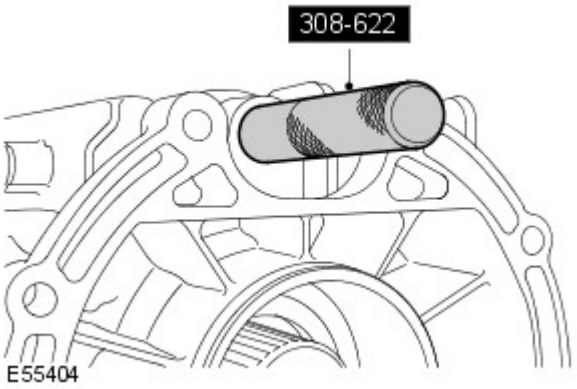

1. Install the gearshift control shaft seal.

- Clean the component mating faces.
- Use the special tool.

2. Install the selector rod coupling.

- Install the link pin.
- Secure with the clip.

3. Install the gearshift rod.

- Clean the components.
- Lubricate the components.
- Install new O-ring seals.
- Install the clip.

4. Install the transfer case.
For additional information, refer to: Transfer Case - TDV6 3.0L Diesel (308-07B Transfer Case, Removal).

5. Drain and refill the transmission.
For additional information, refer to: Transmission Draining and Filling (308-03 Manual Transmission/Transaxle - TDV6 2.7L Diesel, General Procedures).

transmissionmanuals.com

Published: 11-May-2011

Manual Transmission / Transaxle - TDV6 2.7L Diesel - Gear Position Sensor

In-vehicle Repair

Removal

1. Disconnect the battery ground cable.
   For additional information, refer to: Specifications (414-00 Battery and Charging System - General Information, Specifications).

2. WARNING: Do not work on or under a vehicle supported only by a jack. Always support the vehicle on safety stands.

   Raise and support the vehicle.

3. Remove the transmission.
   For additional information, refer to: Transmission (308-03 Manual Transmission/Transaxle - TDV6 2.7L Diesel, Removal).



4. CAUTION: Before disconnecting or removing the components, ensure the area around the joint faces and connections are clean. Plug open connections to prevent contamination.

   Remove the gear position sensor.

   - Remove the 2 Torx screws.
   - Remove and discard the O-ring seal.

Installation

1. Install the gear position sensor.
   - Clean the component mating faces.
   - Install a new O-ring seal.
   - Apply sealant to the Torx screw thread.
   - Tighten the Torx screws to 10 Nm (7 lb.ft).

2. Install the transmission.
   For additional information, refer to: Transmission (308-03 Manual Transmission/Transaxle - TDV6 2.7L Diesel, Removal).

3. Connect the battery ground cable.
   For additional information, refer to: Specifications (414-00 Battery and Charging System - General Information, Specifications).

transmissionmanuals.com

Published: 11-May-2011

Manual Transmission / Transaxle - TDV6 2.7L Diesel - Transmission

Removal

1. Position the vehicle on a lift.
2. Disconnect the battery ground cable.
   For additional information, refer to: Battery Charging (414-00, General Procedures).
3. Remove the ride and handling optimization switch.
   For additional information, refer to: Ride and Handling Optimization Switch (204-06, Removal and Installation).
4. Release the gearshift mounting bracket.
   - Remove the 2 gearshift mounting bracket bolts.
   - Release the gearshift lever gaiter.

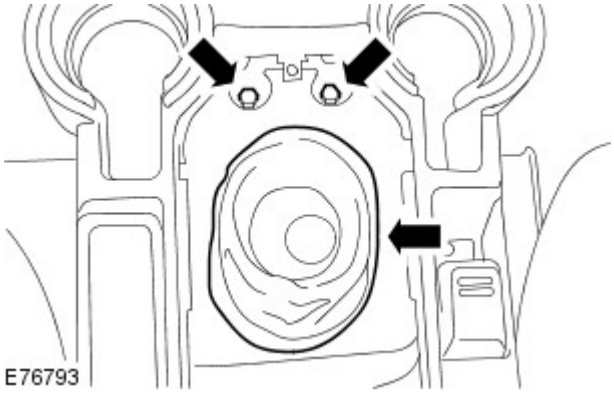

5. WARNING: Do not work on or under a vehicle supported only by a jack. Always support the vehicle on safety stands.

   Raise and support the vehicle.
6. Remove the fuel tank heat shield.
   - Remove the 3 bolts and 2 nuts.

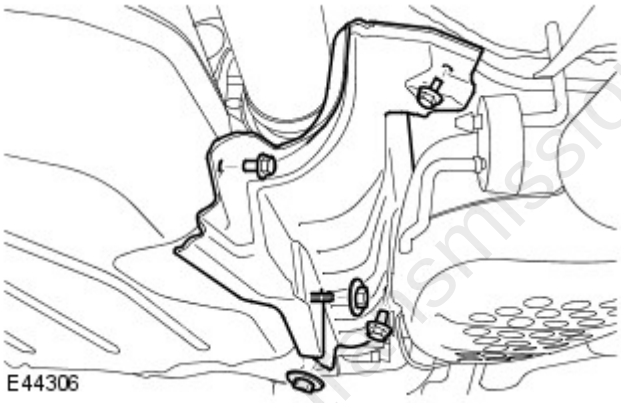

7. CAUTIONS:

   Mark the position of the driveshaft flange in relation to the drive pinion flange.

   To avoid damage to the joint or gaiter, do not allow the driveshaft to hang.

   Release the driveshaft from the transfer case drive flange.
   - Remove the 6 Torx bolts and washers.

transmissionmanuals.com

8. Remove the 2 driveshaft center bearing mount bolts.

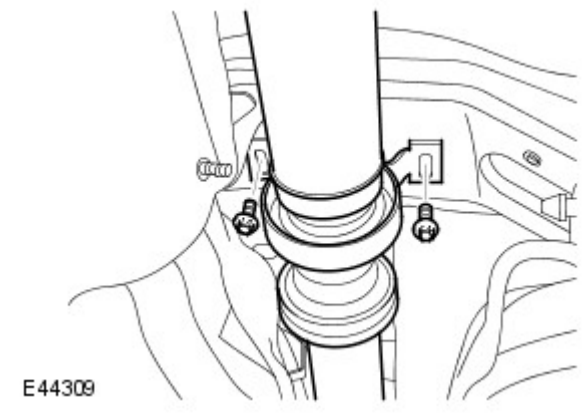

9. CAUTION: To avoid damage to the joint or gaiter, do not allow the driveshaft to hang.

Using a suitable tie strap, reposition and secure the driveshaft to the exhaust system.

10. Remove the engine undershield.
For additional information, refer to: Engine Undershield (501-02 Front End Body Panels, Removal and Installation).

11. Remove the front driveshaft.
For additional information, refer to: Front Driveshaft - TDV6 3.0L Diesel (205-01 Driveshaft, Removal and Installation).

12. Remove the exhaust heat shield.

1. Remove the 2 exhaust heat shield front nuts.
2. Release the bulkhead heat shield.
3. Remove the 5 remaining exhaust heat shield nuts.

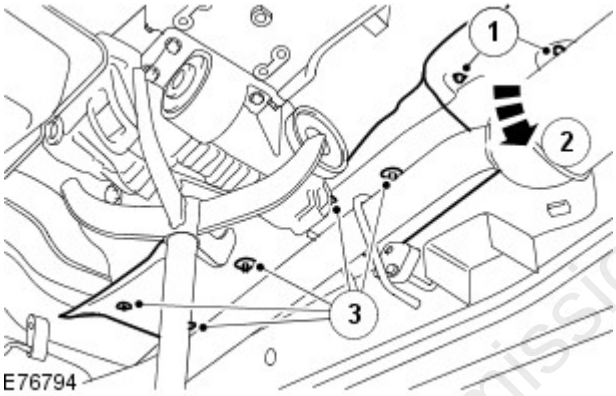

13. Remove the 2 turbocharger support bracket bolts.

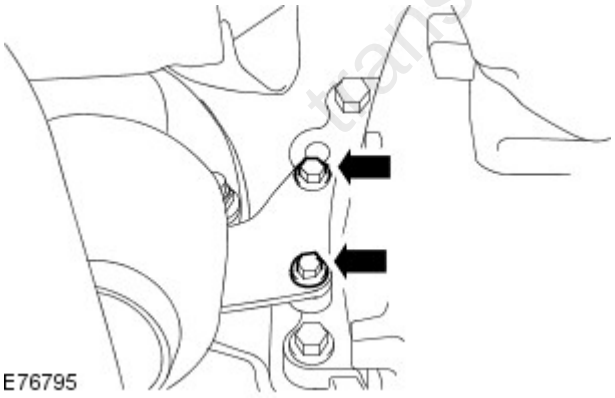

transmissionmanuals.com

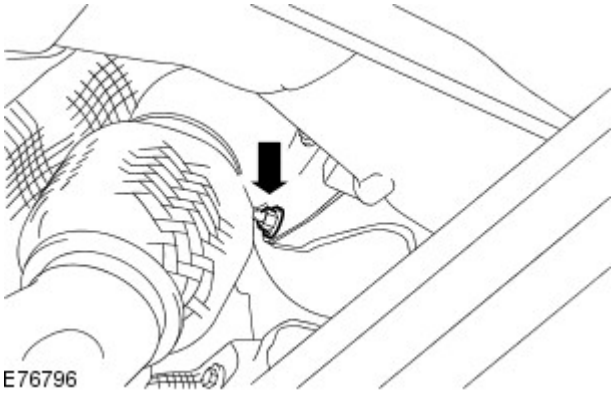

14. Loosen the turbocharger support bracket nut and reposition the turbocharger support bracket.

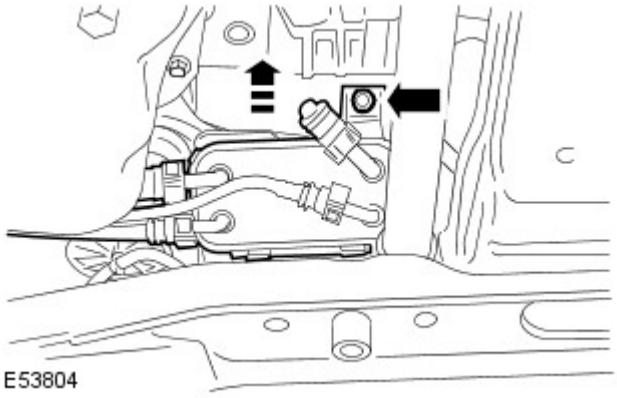

15. Release and reposition the fuel cooler.

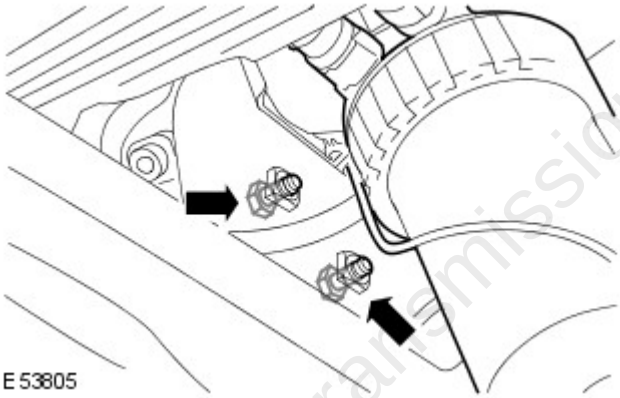

16. Release the fuel filter housing and support bracket.

- Remove the 2 bolts.

transmissionmanuals.com

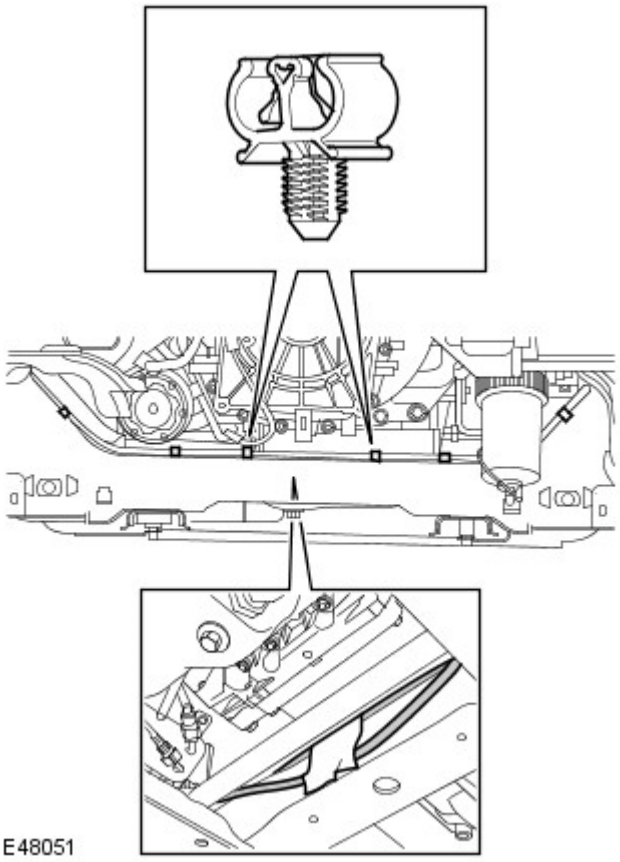
E48051

17. Secure the vacuum hose to the forward edge of the chassis cross member.

- Release from the 6 clips.
- Secure with adhesive tape.
- Remove the 2 clips.

18. CAUTIONS:

An approved hose clamp must be used.

Before the disconnection or removal of any components, ensure the area around joint faces and connections are clean. Plug any open connections to prevent contamination.

Disconnect the clutch fluid hose.

- Remove the clip.
- Clamp the hose.
- Remove and discard the O-ring seal.

19. Release the gearshift rod.

- Remove the clip.
- Remove and discard the O-ring seals.

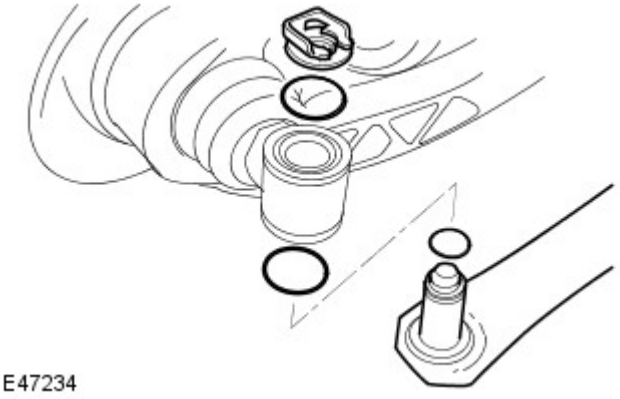
E47234

transmissionmanuals.com

20. Release the wiring harness from the transfer case.

1. Disconnect the transfer case 3 electrical connectors.
2. Remove the wiring harness bolt.
3. Release the wiring harness from the clip.

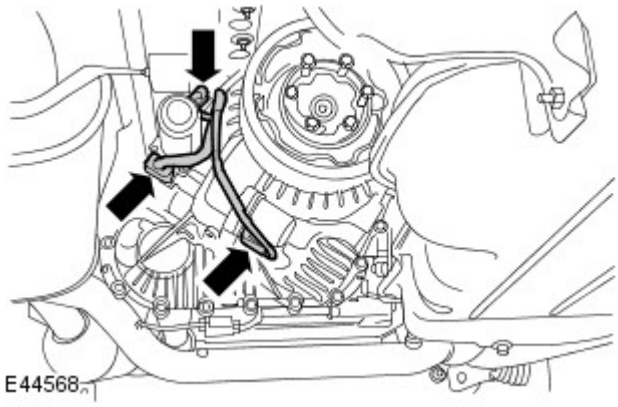

21. Position the special tool to the transmission.

- Secure the transmission to the special tool.

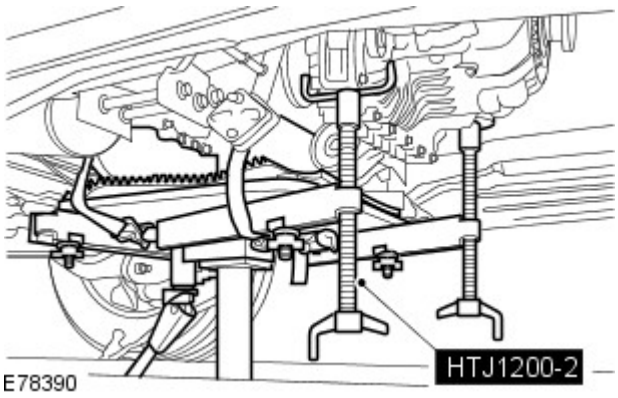

22. Lower the rear of the transmission for access.

23. Release the wiring harness from the transmission.

- Disconnect the 2 electrical connectors.
- Remove the 2 bolts.
- Release the wiring harness from the clip.

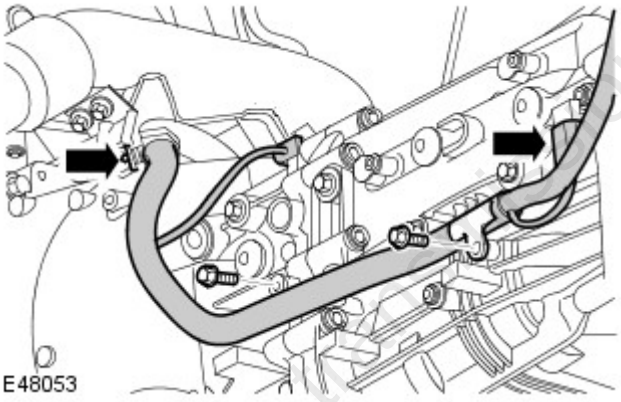

24. CAUTION: Always plug any open connections to prevent contamination.

Disconnect the gearbox breather line.

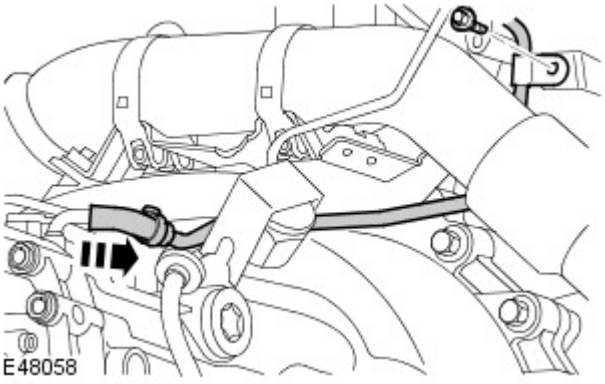

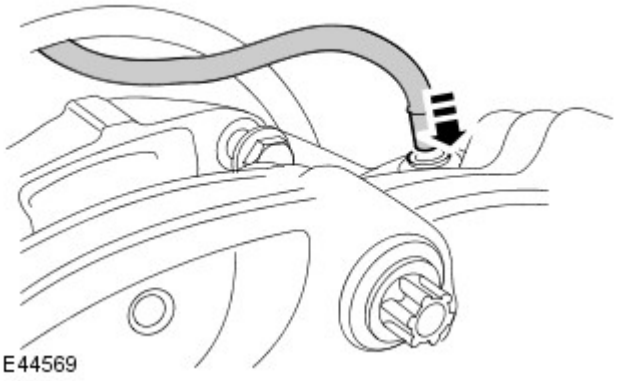
E44569

25. CAUTION: Always plug any open connections to prevent contamination.

Disconnect the transfer case breather line.

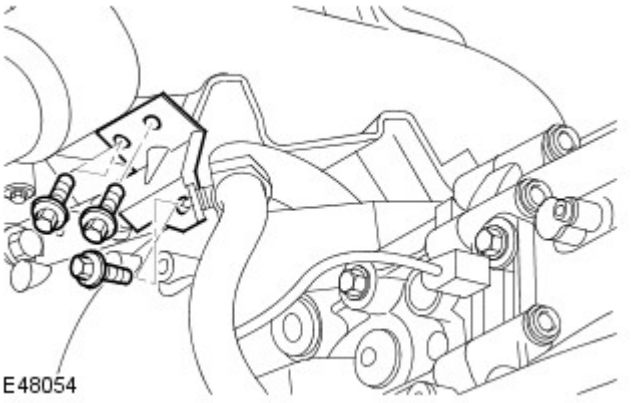
E48054

26. Remove the exhaust cross-over pipe LH support bracket.

- Remove the 3 bolts.

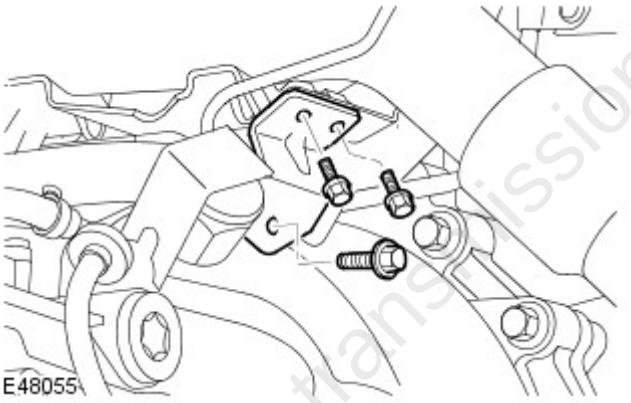
E48055

27. Remove the exhaust cross-over pipe RH support bracket.

- Remove the 3 bolts.

28. Reposition the wiring harness to allow access to exhaust cross-over pipe center support bracket.

29. Remove the exhaust cross-over pipe center support bracket.

- Remove the 2 bolts.

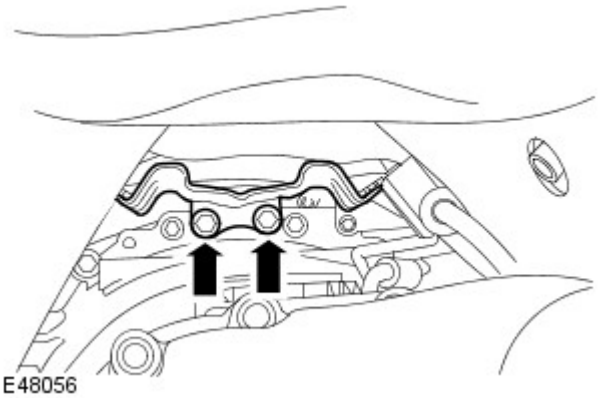
E48056

transmissionmanuals.com

30. Remove the 14 transmission bolts.

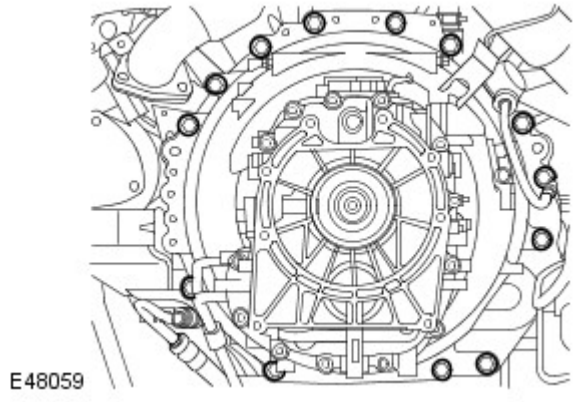

31. CAUTION: Make sure the transmission remains level.

Release the transmission from the engine and move the transmission 40mm (1.57 inches) rearwards.

32. Using the transmission jack, rotate the transmission to gain access to the gearshift mechanism.

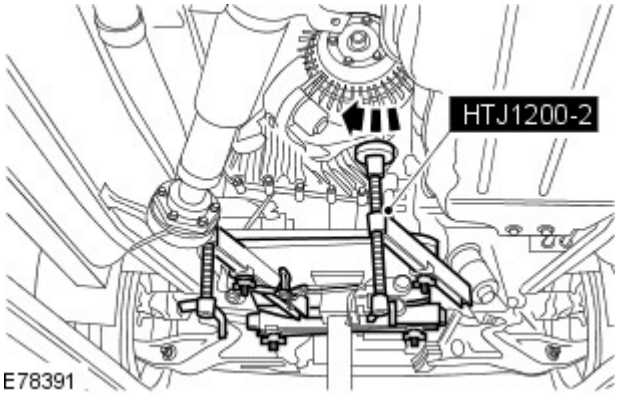

33. NOTE: Transfer case shown removed for clarity.

Release the gearshift mechanism from the transmission.

- Release the clip.
- Release the pin.

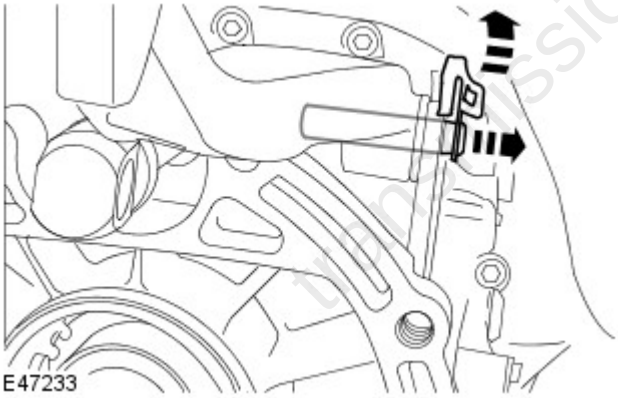

34. CAUTION: Make sure the transmission remains level.

With assistance, remove the transmission.

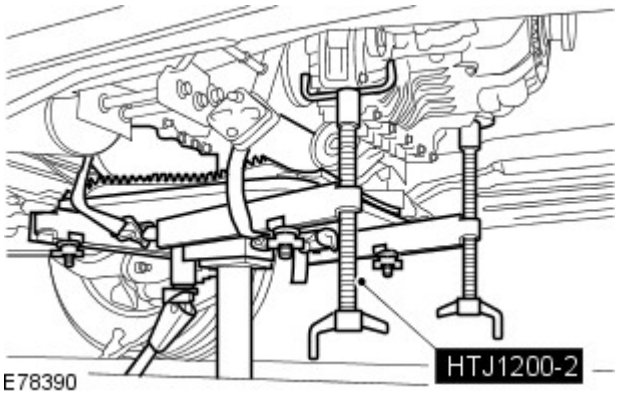

35. Remove the transmission from the transmission jack.

transmissionmanuals.com

transmissionmanuals.com

Installation

1. Position the transmission to the transmission jack.

2. CAUTIONS:

Make sure the transmission remains level.

Make sure the clutch assembly is not damaged as the transmission is installed.

• NOTE: Do not install the transmission fully to the engine, a 40mm (1.57 inches) gap must be maintained.

With assistance, install the transmission.

- Clean the component mating faces.

3. Using the transmission jack, rotate the transmission to gain access to the gearshift mechanism.

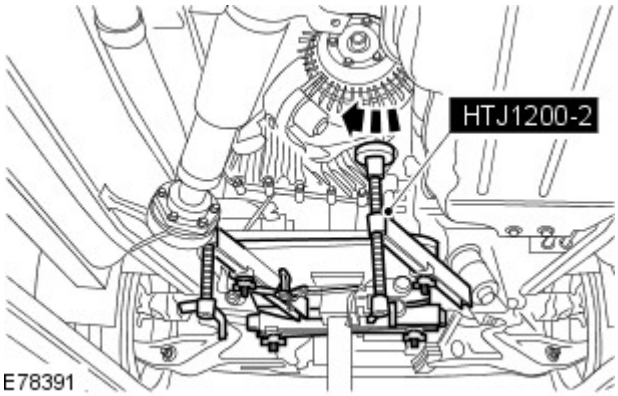

4. Attach the gearshift mechanism to the transmission.

5. CAUTION: Make sure the clutch assembly is not damaged as the transmission is installed.

Align the transmission to the engine and install the transmission.

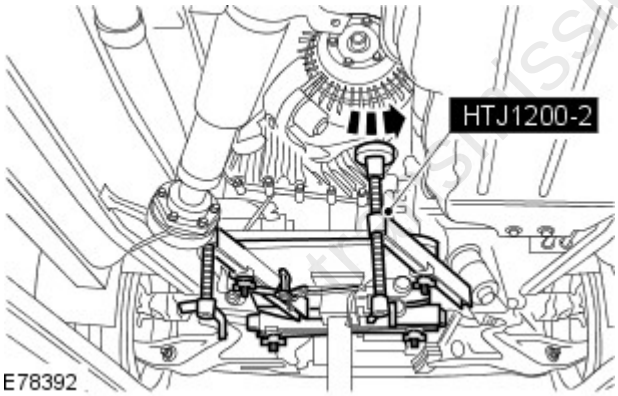

6. NOTE: Transfer case shown removed for clarity.

Install the 14 transmission bolts.

- Tighten the bolts to 40 Nm (30 lb.ft).

7. Install the exhaust manifold crossover pipe center support bracket.

- Loosely install the 2 bolts.

8. Install the exhaust manifold crossover pipe RH support bracket.

- Loosely install the 3 bolts.

9. Install the exhaust manifold crossover pipe LH support bracket.

- Loosely install the 3 bolts.

transmissionmanuals.com

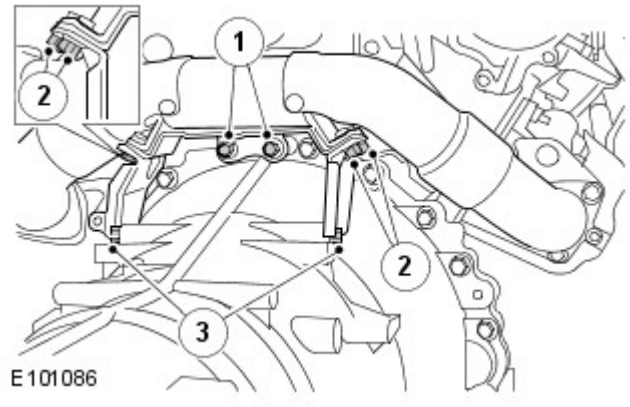

10. Tighten the exhaust manifold crossover pipe mounting bracket bolts in the following sequence.

- Tighten the 2 bolts marked 1 to 10 Nm (7 lb.ft).
- Loosen the 2 bolts by 90 degrees.
- Tighten the 2 bolts marked 3 to 10 Nm (7lb.ft).
- Loosen the 2 bolts by 90 degrees.
- Tighten the 4 bolts maked 2 to 25 Nm (18 lb. ft).
- Tighten the 2 bolts maked 1 to 25 Nm (18 lb. ft).
- Tighten the 2 bolts maked 3 to 25 Nm (18 lb. ft).
- Attach the wiring harness.

11. Reposition the wiring harness to the transmission.

12. Connect the transmission and transfer case breather lines.

13. Secure the wiring harness to the transmission.

- Attach the wiring harness to the clip.
- Connect the electrical connectors.
- Install and tighten the 2 bolts.

14. Raise the transmission jack.

15. Secure the wiring harness to the transfer case.

- Tighten the bolt to 25 Nm (18 lb.ft).
- Attach the wiring harness to the clip.

16. Connect the transfer case electrical connectors.

17. Attach the gearshift rod.

- Clean the components.
- Lubricate the components.
- Install new O-ring seals.
- Install the clip.

18. Connect the clutch fluid hose.

- Clean the components.
- Install a new O-ring seal.
- Install the clip.
- Remove the hose clamp.

19. Install the vacuum hose to the clips.

- Remove the adhesive tape.
- Install the retaining clips.

20. Attach the fuel filter support bracket.

- Install the 2 bolts and tighten to 10 Nm (7 lb.ft).

21. Attach the fuel cooler.

- Install the bolt and tighten to 10 Nm (7 lb.ft).

22. Install the 2 turbocharger support bracket bolts.

- Tighten the bolts to 25 Nm (18 lb.ft).

23. Tighten the turbocharger support bracket nut.

- Tighten the nut to 25 Nm (18 lb.ft).

24. Install the exhaust heat shield.

transmissionmanuals.com

25. Bleed the clutch system.

26. Install the front driveshaft.
For additional information, refer to: Front Driveshaft - TDV6 2.7L Diesel (205-01 Driveshaft, Removal and Installation).

27. Remove the transmission jack.

28. Install the engine undershield.
For additional information, refer to: Engine Undershield (501-02 Front End Body Panels, Removal and Installation).

29. CAUTION: To avoid damage to the joint or gaiter, do not allow the driveshaft to hang.

Attach the driveshaft to the transfer case drive flange.

- Remove the securing strap.
- Tighten the Torx bolts to 55 Nm (40 lb.ft).

30. Install the driveshaft center bearing mount bolts.

- Align the center bearing mount.
- Tighten the 2 driveshaft center bearing bolts to 30 Nm (22 lb.ft).

31. Install the fuel tank heat shield.

- Tighten the bolts to 6 Nm (4 lb.ft).
- Tighten the nuts to 3 Nm (2 lb.ft).

32. Lower the vehicle.

33. Attach the gearshift lever gaiter.

34. Install the 2 gearshift mechanism mounting bracket bolts.

- Tighten the bolts to 25 Nm (18 lb.ft).

35. Install the ride and handling optimization switch.
For additional information, refer to: Ride and Handling Optimization Switch (204-06 Ride and Handling Optimization, Removal and Installation).

36. Connect the battery ground cable.

transmissionmanuals.com